rovatti pompe	TABELLA RIDUZIONE GIRANTI		
	SK		
Ufficio Tecnico	Cod: TP0119	Rev. 00	Data: 13/12/2011

Girante corpo pompa

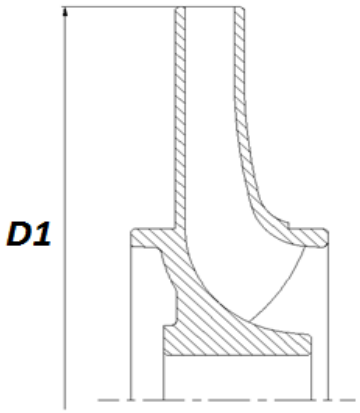

Girante intermedia

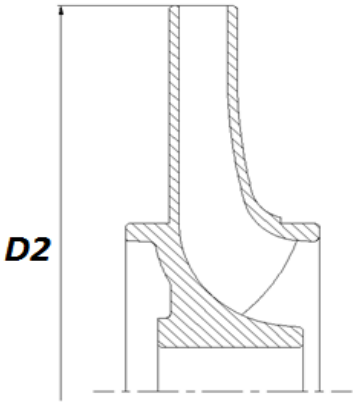

Girante aspirazione

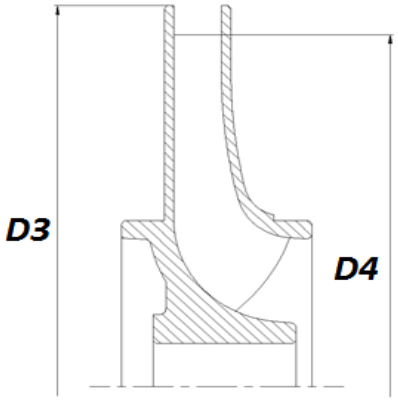

POMPA	E				F				G				H				I				L				M				N				O			
	D1	D2	D3	D4	D1	D2	D3	D4	D1	D2	D3	D4	D1	D2	D3	D4	D1	D2	D3	D4	D1	D2	D3	D4	D1	D2	D3	D4	D1	D2	D3	D4	D1	D2	D3	D4
S1K50/2	208	---	160	160	200	---	160	160	192	---	160	160	184	---	160	160	176	---	160	152	168	---	160	144	160	---	160	136	---	---	---	---	---	---	---	---
S1K50/3		160				160				160				160				160				160				160										
S1K50/4																																				
S2K65/2	262	---	205	205	250	---	205	205	240	---	205	205	230	---	205	205	220	---	205	195	210	---	205	185	200	---	205	175	---	---	---	---	---	---	---	---
S2K65/3		205				205				205				205				205				205				205										
S2K65/4																																				
S2K80/2	262	---	205	205	250	---	205	205	240	---	205	205	230	---	205	205	220	---	205	195	210	---	205	185	200	---	205	175	---	---	---	---	---	---	---	---
S2K80/3		205				205				205				205				205				205				205										
S2K80/4																																				
S3K100/2	335	---	264	264	320	---	264	264	305	---	264	264	290	---	264	264	275	---	264	255	260	---	264	245	245	---	264	235	235	---	264	235	---	---	---	---
S3K100/3		264				264				264				264				264				264				264				264						
S4K125/2	419	---	329	329	400	---	329	329	385	---	329	329	370	---	329	329	355	---	329	320	340	---	329	310	325	---	329	300	---	---	---	---	---	---	---	---
S4K125/3		329				329				329				329				329				329				329										
S4K125/2A	---	---	---	---	---	---	---	---	---	---	---	---	---	---	---	---	---	---	---	---	---	---	---	---	329	---	329	329	315	---	329	315	300	---	329	300
S4K125/3A																										329				329				329		
S4K150/2	419	---	329	329	400	---	329	329	385	---	329	329	370	---	329	329	355	---	329	320	340	---	329	310	325	---	329	300	310	---	329	290	---	---	---	---
S4K150/3		329				329				329				329				329				329				329				329						
S4K150/2A	---	---	---	---	---	---	---	---	---	---	---	---	---	---	---	---	---	---	---	---	---	---	---	---	329	---	329	329	315	---	329	315	300	---	329	300
S4K150/3A																										329				329				329		