GE
Power Conversion

Product Information Packet

November 13, 2019

Data shown is for the current revision model #. Ensure your nameplate model # matches.

Model Number:	**5KFE312ZWL2035**
Catalog Number:	
Instruction Manual:	GEI-M1052-SP
Connection Diagram:	GEM2034E-FIG110
Outline Drawing:	358B6911AD

Accessory Connection Diagrams

Bearing Thermocouple:	None	**Heater:**	None
RTD:	None	**Thermistor:**	None
Thermostat:	None	**Winding Thermocouple:**	None
Bearing RTD:	None		

Table of Contents

Specification	01
Performance Characteristics	02
Outline Drawing	03
Connection Drawing(s)	04

Marks:

MODEL NUMBER:	**5KFE312ZWL2035**	**Estimated Weight(kg):**	1178
Outline Drawing:	358B6911AD	**Duty:**	S1
Connection Diagram:	GEM2034E-FIG110	**Enclosure:**	TEFC
Connection:	2 DELTA / DELTA	**Encl Construction:**	Energy Saver
Instruction Book:	GEI-M1052-SP	**Cooling (IC):**	411
Design Code:	NA	**Protection (IP):**	55
Type:	KFE	**Ambient Max (°C):**	40
Frame:	315M	**Alt Ambient Max(°C):**	--
Mounting (IM):	B3	**Ambient Min(°C):**	-15
Phases:	3	**Insulation Class:**	F
Poles:	4	**IEC Design:**	N
Output Power(HP):	175	**Nominal Efficiency (%):**	IE2-95.0
RPM:	1785	**Guaranteed Efficiency (%):**	94.3
Voltage(V):	220 / 440	**Power Factor (%):**	89.0
Hertz:	60	**Bearing - DE:**	6319/C3
Amps - FL:	410/205	**Bearing - ODE:**	6319/C3
Service Factor:	1.15	**Vibration (mm/s) rms:**	2.8
Alt Service Factor:	--		

Enclosure is Totally Enclosed Fan-Cooled

Stamped Nameplate Notes:

Additional Information:

SUITABLE FOR DOL STARTING
ROTATION: CW VIEWED FROM DE
INVERTER RATED PWM 20:1 VARIABLE TORQUE, 1.0 SF

Performance Characteristic:

LOAD %	125.0	115.0	100.0	75.0	50.0	25.0	0.0
% EFF	94.95	95.01	95.06	94.98	94.46	92.28	0.00
% PF	92.11	91.9	91.33	89.24	83.3	64.23	31.87
AMPS	247.5	228.1	199.5	153.2	110.1	73.1	56.3

TORQUE(FL) N-m	703.8	TORQUE(LR)%FL	186.6	TORQUE(BD)%FL	337.7
AMPS(LR)	1548.1	PF AT START	31.9%		

Other Useful Information for Application:

Rotor Inertia (Kg-m^2) :	3.2628
Max load inertia (Kg-m^2):	26.9696
Load Type:	Square Torque/Speed Characteristic
Voltage:	100%
Number of starts per hour:	2 Cold or 1 Hot
Acceleration Time with maximum inertia (sec):	2.2
Safe stall time (sec): Cold/Hot	23.9/12.0

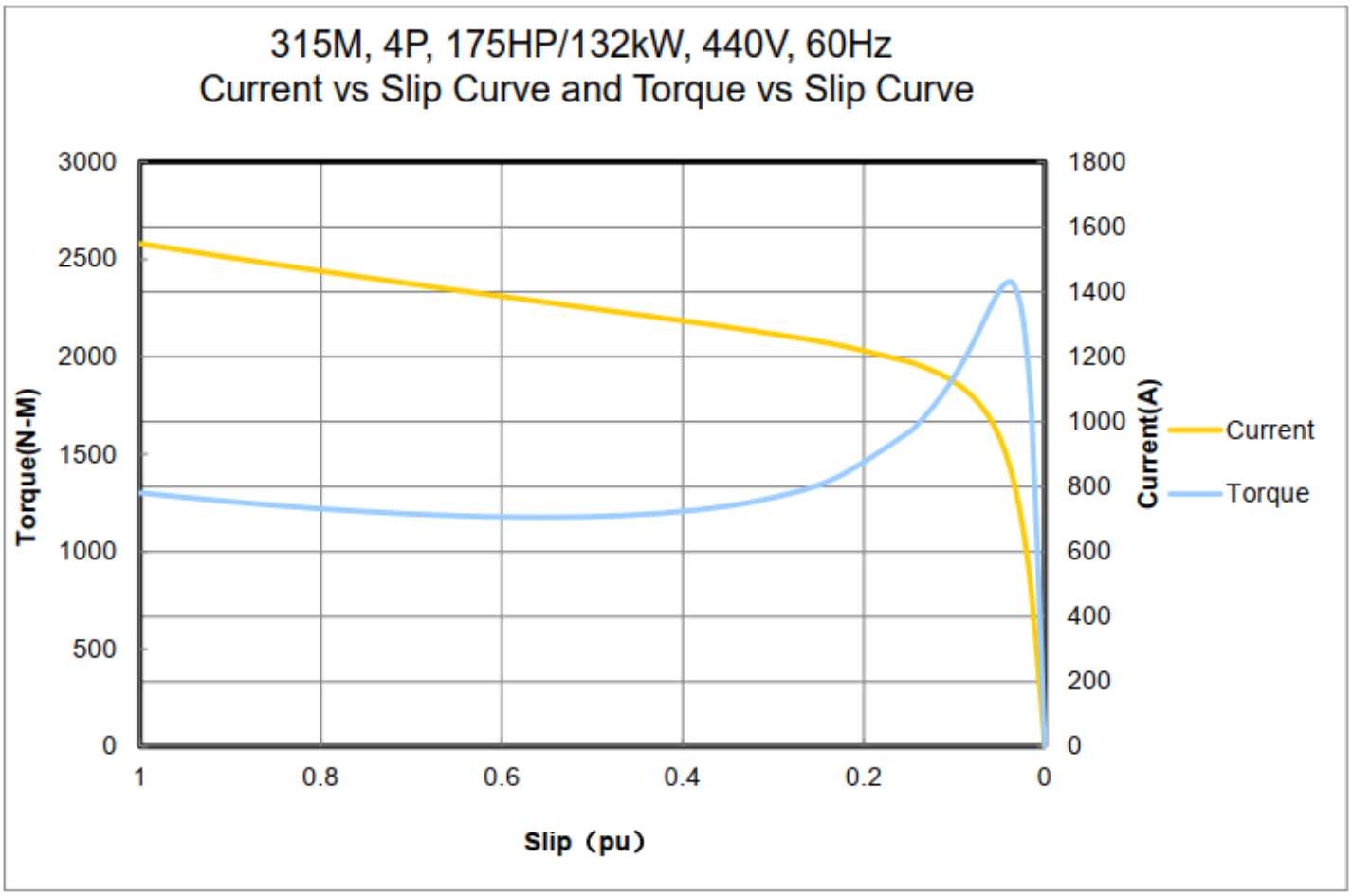

Marks:

Model Number: 5KFE312ZWL2035

November 13, 2019

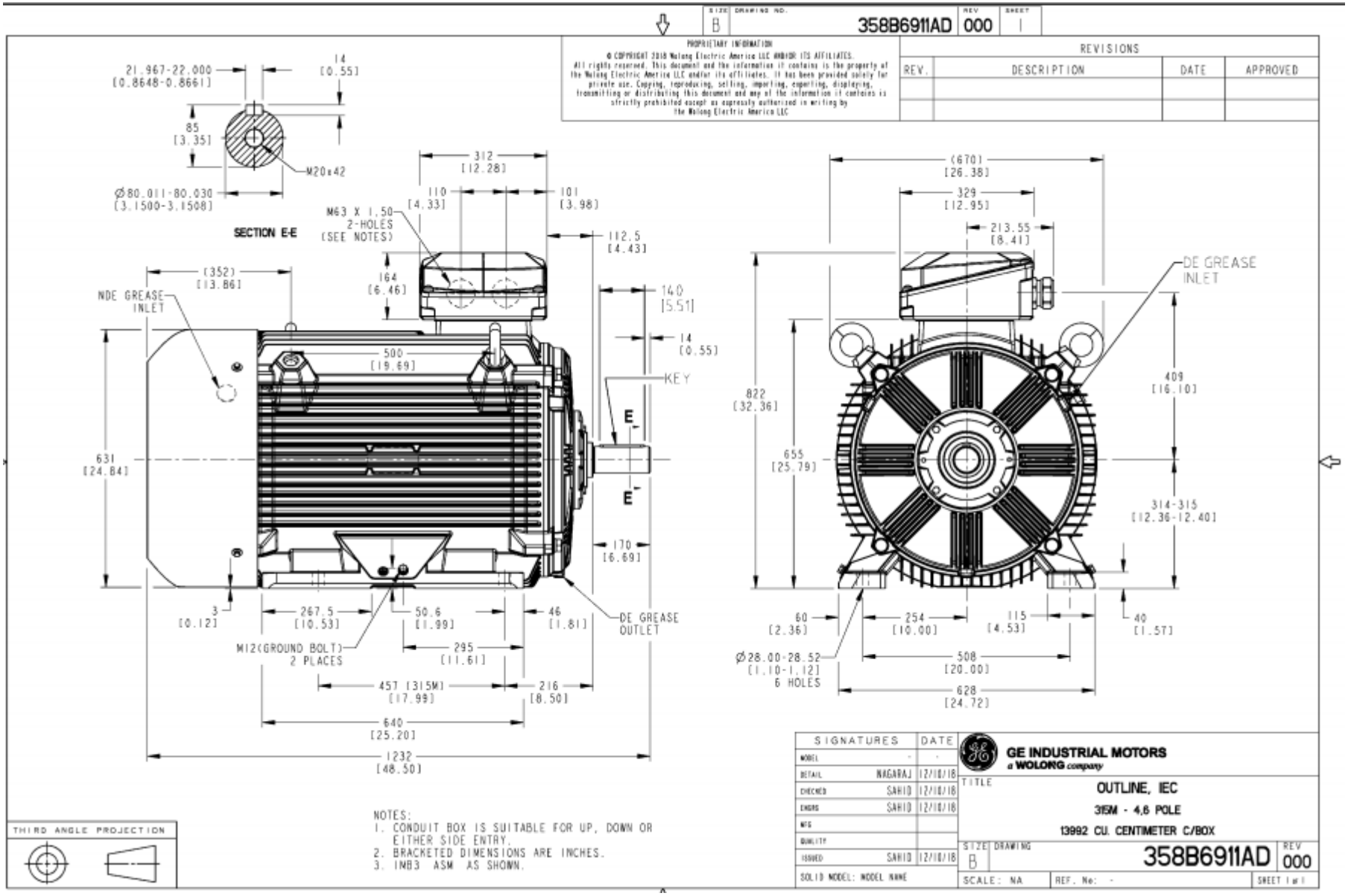

Connection Diagram

GEM2034E-FIG110

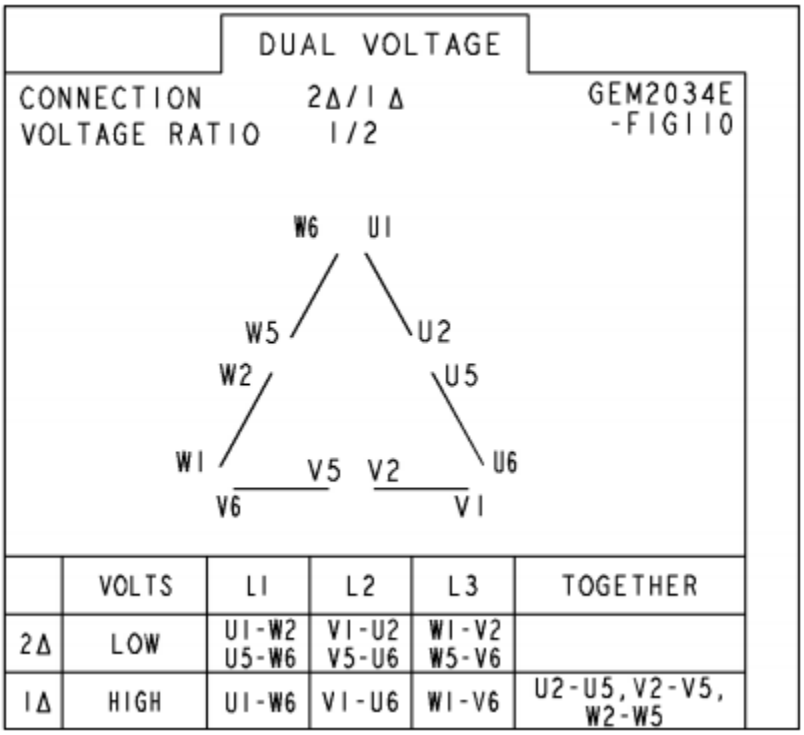

	VOLTS	L1	L2	L3	TOGETHER
2Δ	LOW	U1-W2 U5-W6	V1-U2 V5-U6	W1-V2 W5-V6	
1Δ	HIGH	U1-W6	V1-U6	W1-V6	U2-U5, V2-V5, W2-W5