CDM1 Series Moulded Case Circuit Breakers

Scope of Application

CDM1 series moulded case circuit breaker(hereinafter called circuit breaker), is suitable for the circuit of AC50Hz/60Hz, rated current 630A, rated operating voltage 690V or less. The series circuit breaker,in the distribution network, can be used for distributing the energy or electricity and protecting the circuit and power device against the overload, short-circuit and under-voltage. The circuit breaker with the frame rated current 400A or less can be used for protecting the motor and starting non-frequently the motor. Under the normal condition, it can also be sued for making and breaking the circuit frequently.

Products conform to IEC 60947-2,60947-4.

Note: (1)No code for distributing circuit breaker, 2 represents circuit breaker for motor protection.

(2) No code for direct handle operation; D represents motor operation, Z represents rotation handle.

(3)L represents standard type, M represents higher breaking type and H represents high breaking type.

Main Technical Parameter

Parts code / Release method / Parts name	Instantaneous Release	Reset release
Without parts	200	300
Alarm contact	208	308
Shunt release	210	310
Auxiliary contact	220	320
Undervoltage Release	230	330
Auxiliary contact of Shunt Release	240	340
Secondary auxiliary contact	250	350
Auxiliary contact of undervoltage elease	260	360
Alarm contact of Shunt release	270	370
Secondary auxiliary contact and alarm contact	218	318
Alarm contact of Shunt release	228	328
Undervoltage release alarm contact	238	338
Shunt release auxiliary contact alarm contact	248	348
Shunt release undervoltage release alarm contact	258	358
Secondary auxiliary contact alarm contact	268	368
Auxiliary contact undervoltage release alarm contact	278	378

Construction Features

Series CDM1circuit breaker adopts metal cascade technology(VJC), which has

CDM1 Series Moulded Case Circuit Breakers

Main Technical Data

Type	InA	Poles	Power consumption		Ics/COSΦ		Icu/COSΦ		Arcing distance
			Fixed	Draw-out	400V	690V	400V	690V	mm
CDM1-63L	6、10、16、20、32、40、50、63	3	20	25	18/0.30	—	25/0.25	—	50
CDM1-63M			25	30	30/0.25	—	50/0.25	—	
CDM1-63		4	33	40					
CDM1-100L	10、16、20、32、40、50、63、80、100	3	35	40	26/0.25	—	35/0.25	—	
CDM1-100M			40	50	30/0.25	—	50/0.25	—	
CDM1-100H					43/0.25	10/0.5	85/0.20	20/0.3	
CDM1-100		2	26	33	30/0.25	—	50/0.25	—	
		4	53	66					
CDM1-225L	100、125、160、180、200、225	3	55	65	26/0.25	—	35/0.25	—	
CDM1-225M			60	75			50/0.25	—	
CDM1-225H						10/0.5	85/0.20	20/0.3	
CDM1-225		2	40	50	30/0.25	—	50/0.25	—	
		4	80	100					
CDM1-400C	225、250、315、350、400	3	80	100	20/0.25	—	35/0.25	—	100
CDM1-400L					30/0.25	—	50/0.25	10/0.5	
CDM1-400M			90	110	40/0.25	—	—	—	
CDM1-400H					50/0.20	10/0.5	100/0.20	20/0.3	
CDM1-400		4	120	150	30/0.25	—	—	—	
CDM1-630L	400、500、630	3	130	180	34/0.25	—	45/0.25	—	
CDM1-630M			150	200	42/0.25	—	65/0.25	—	
CDM1-630H					65/0.25	10/0.5	100/0.20	20/0.3	
CDM1-630		4	200	267	42/0.25	5/0.7	65/0.25	10/0.5	
CDM1-800C	630、700、800	3	125	170	20/0.25	—	35/0.25	—	
CDM1-800L					30/0.25	—	50/0.25	—	
CDM1-800M			135	190	40/0.25	—	70/0.20	—	
CDM1-800H					50/0.25	10/0.5	100/0.20	20/0.3	
CDM1-800		4	180	250	30/0.25	—	50/0.25	—	
CDM1-1250	800、1000、1250	3	240	300	50/0.25	35/0.3	85/0.25	45/0.25	

Main Technical Parameter

Type	InA	Outline dimension													
		L	L1	W	H	H1	H2	a	b	φd	a1	b1	d1	H3	H4
CDM1-63L	3	135	21	76	89.5	74	21	25	117	3.5	25	117	18	52	75
CDM1-63M					99	82	28								
CDM1-63	4			103											
CDM1-100L	3	150	51	92	87	68	25	30	129	4.5	30	132	22	65	100
CDM1-100M					103.5	87	24								
CDM1-100H															
CDM1-100	2			65				—							
	4			122				30							
CDM1-225L	3	165	64	107	108	87	25	35	126	5.5	35	144	24	70	110
CDM1-225M					124.5	104	24.5								
CDM1-225H															
CDM1-225	2			75				—							
	4			142				35							
CDM1-400C、L、M、H	3	257	105	140	146	100	36.5	44	215	6.5	44	225	26	70	120
CDM1-400	4			184											
CDM1-630L、M、H	3	270	118	182	160	108	41	58	200	7	58	234	36	70	120
CDM1-630	4			240											
CDM1-800C、L、M、H	3	280	102	210	146	103	34.5	70	243	7	70	243	48	75	125
CDM1-800	4			280											
CDM1-1250	3	406	104	210	190	140.5	58.5	70	375	10	—	—	—	—	—

CDM1 Series Moulded Case Circuit Breakers

Overall and Mounting Dimension

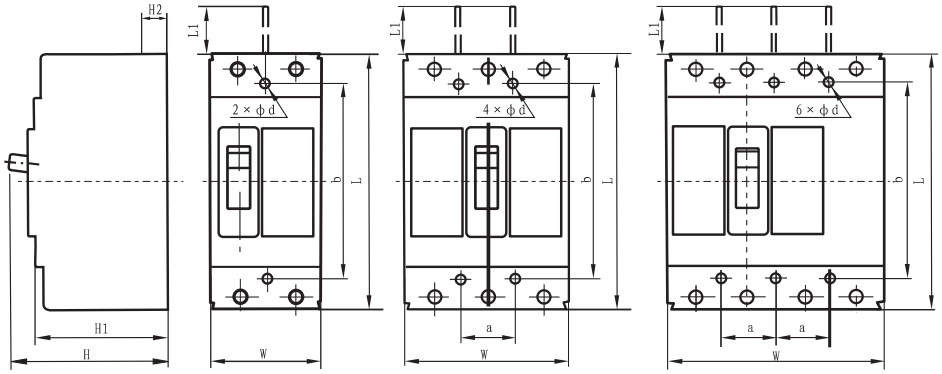

2p 3p 4p

outline ang mounting dimension

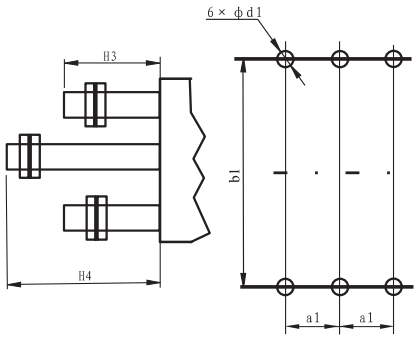

back-board wiring dimension for 3-pole

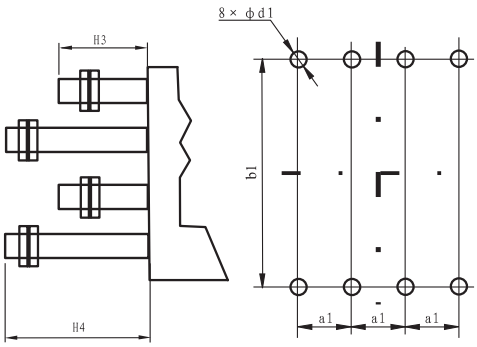

back-board wiring dimension for 4-pole